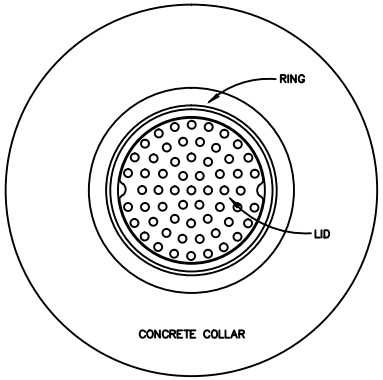

PLAN VIEW

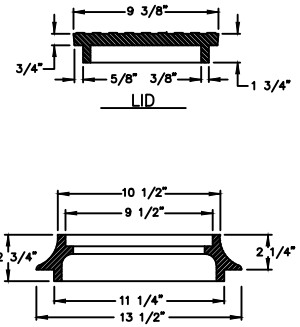

LID

RING

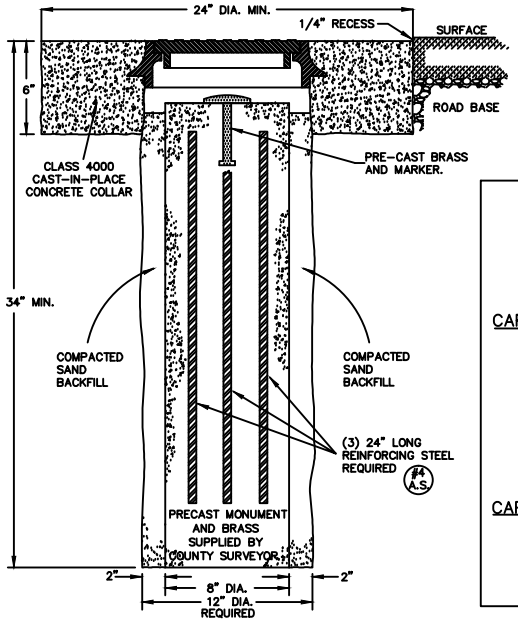

COUNTY STREET MONUMENT

SECTION

RING AND LID

CAST IRON to conform to ASTM
A-48, CLASS 35B
H-20 Wheel Loading
Est. Weight: 43 lbs.

BRASS

Item # 9

Brass Monument Post
(Domed Top)

Note: Lettering as Required
Text Size 5/16"

CAP PLAN

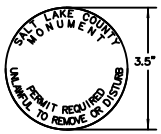

3.5" Diameter

CAP SECTION

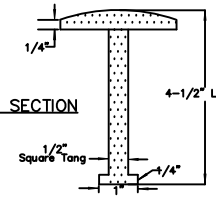

NOTE:
POUR IN PLACE MONUMENTS MAY BE ALLOWED ON A CASE BY CASE BASIS. SUBJECT TO PRIOR APPROVAL BY THE SALT LAKE COUNTY SURVEYOR.

GENERAL NOTES

1. Materials, construction and workmanship shall be in accordance with APWA Manual of Standard Specifications (2002 Edition), and supplements thereto which are in effect at the date of this request.
2. County Monument cover, frame and pre cast brass and marker base shall be furnished by the County as provided in the permitting process.
3. Cover, frame, riser and pre cast brass and marker base can be obtained at Public Works Operations, 7125 South 600 West, Midvale, Utah 84047. The developer, contractor, or agent shall be responsible for the transportation of all monuments and incidental items required to complete the monument installation.
4. The County Surveyor shall check monument point and straddles before monuments can be installed.
5. Reinforcing steel used in County survey monuments shall be No. 4 bars.
6. The County Surveyor shall cross brass marker after installation of survey monument.
7. Contractor shall allow the County Surveyor an opportunity to salvage all existing monuments, specifically; rings, risers, lids, and brass markers.
8. Field inspection by governing entity required prior to installation of monument.
9. The non-use of any materials received from Salt Lake County shall not constitute a claim of credit.
10. Developer/Agent shall provide copies of approved and recorded subdivision plats, street dedications, or affidavit of corrections showing coordinates of new monuments and their relationship to monument control.

MONUMENT FLOW PROCESS

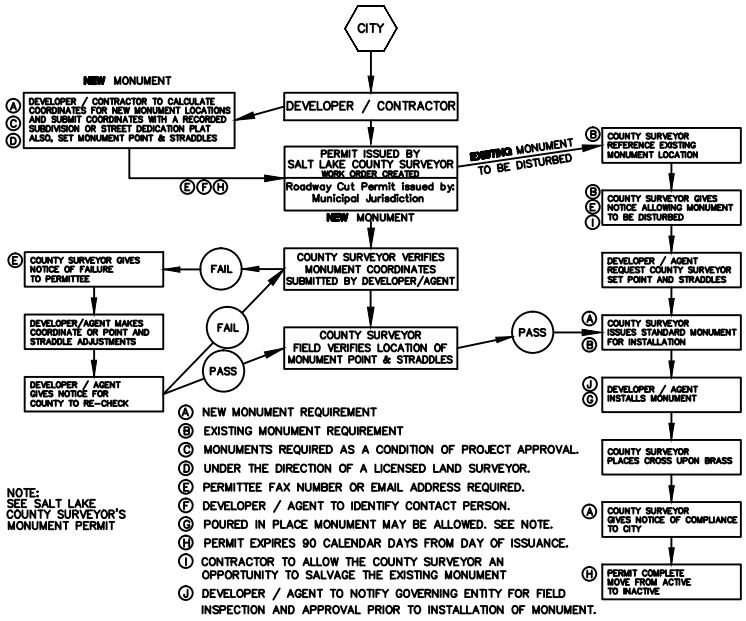

NOTE:
SEE SALT LAKE COUNTY SURVEYOR'S MONUMENT PERMIT

- A NEW MONUMENT REQUIREMENT
- B EXISTING MONUMENT REQUIREMENT
- C MONUMENTS REQUIRED AS A CONDITION OF PROJECT APPROVAL.
- D UNDER THE DIRECTION OF A LICENSED LAND SURVEYOR.
- E PERMITTEE FAX NUMBER OR EMAIL ADDRESS REQUIRED.
- F DEVELOPER / AGENT TO IDENTIFY CONTACT PERSON.
- G POURED IN PLACE MONUMENT MAY BE ALLOWED. SEE NOTE.
- H PERMIT EXPIRES 90 CALENDAR DAYS FROM DAY OF ISSUANCE.
- I CONTRACTOR TO ALLOW THE COUNTY SURVEYOR AN OPPORTUNITY TO SALVAGE THE EXISTING MONUMENT
- J DEVELOPER / AGENT TO NOTIFY GOVERNING ENTITY FOR FIELD INSPECTION AND APPROVAL PRIOR TO INSTALLATION OF MONUMENT.

NO.	DATE	DESCRIPTION OF REVISION	INITIAL
		REVISIONS	

GRAPHIC SCALE 0 3" 6" 9" 12"

Sheet No. 1 of 1

Prepared By: JPG Date: 01/16/2014
Surveyed By: Date:
Checked By: BMG Date: 01/16/2014

Prepared By The Office Of:
Reid J. Demman, P.L.S.,
Salt Lake County Surveyor
2001 S. State St. #N1500
P.O. Box 4575
Salt Lake City, Utah 84114-4575
(385) 468-8259

COUNTY STREET MONUMENT
AND
MONUMENT FLOW PROCESS